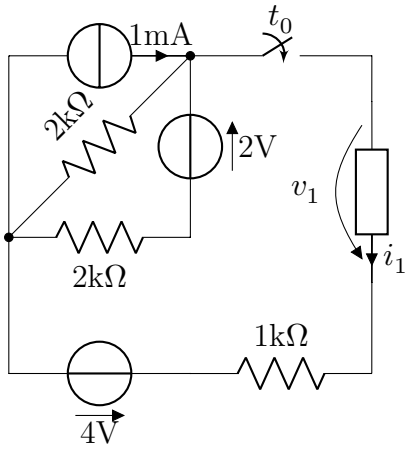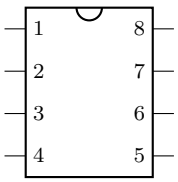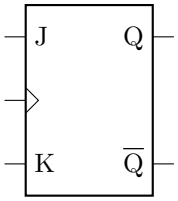A simple example to test the installation.